# Project (Spring 2026)
# The Intelligent Merging Unit: Error Correction by Dynamic State Estimation

**ECE6323-Power System Protection**

**Due Date:**

- **April 27, 2026 (For on-campus students registered in ECE6323-A section)**
- **April 30, 2026 (For off-campus/online students registered in ECE6323-Q section)**

A team of **two** is allowed for this project, and only one member needs to upload the project to Canvas.

## Term Project Description

The performance of any protection system is always dependent upon the quality and validity of the measurements, i.e. the input data into the relay. This has been recognized for any protective system. The introduction of merging units offers a powerful way of validating and correcting, if necessary, the measured sampled values in real time. Specifically, the model of the instrumentation channel can be used in a dynamic state estimation procedure to provide the estimated values of the primary quantities from the secondary quantities. The dynamic state estimation has the inherent capability to correct the errors introduced by the instrumentation channel.

The technology used in the implementation of the setting-less relays provides another possibility. Specifically, merging units sample voltages and currents and transmit the sample values to the process bus and upstream applications. It is possible to provide intelligence to the merging units to make error correction on these measurements. Specifically, the instrumentation channel model is known. The instrumentation channel model together with the measurement at the burden of the channel at the merging unit can be used in a dynamic state estimation procedure to provide the best estimate of the primary quantity. Note this process can be applied to any instrumentation channel independently of how many channels exist. It is also performed at the merging unit level so that the merging unit will stream the estimated values of the primary quantities.

A more detailed view of the problem is shown in Figure 2. Note in general, the instrumentation subsystem consists of instrument transformers (voltage transformers and current transformers), copper wires and the merging unit/relay input circuit. The analog to digital conversion stage is contained in the Merging Unit. Ideally, these voltages and currents should be scaled replicas of the high voltages and currents of the electric power system. Practically, however, the instrumentation channels introduce errors that can distort the waveforms of the high voltages and currents. In some cases, these errors will even cause the mal-operation of

the relay. Therefore, to make the protection scheme reliable, it is essential to correct the errors introduced by the instrumentation channels.

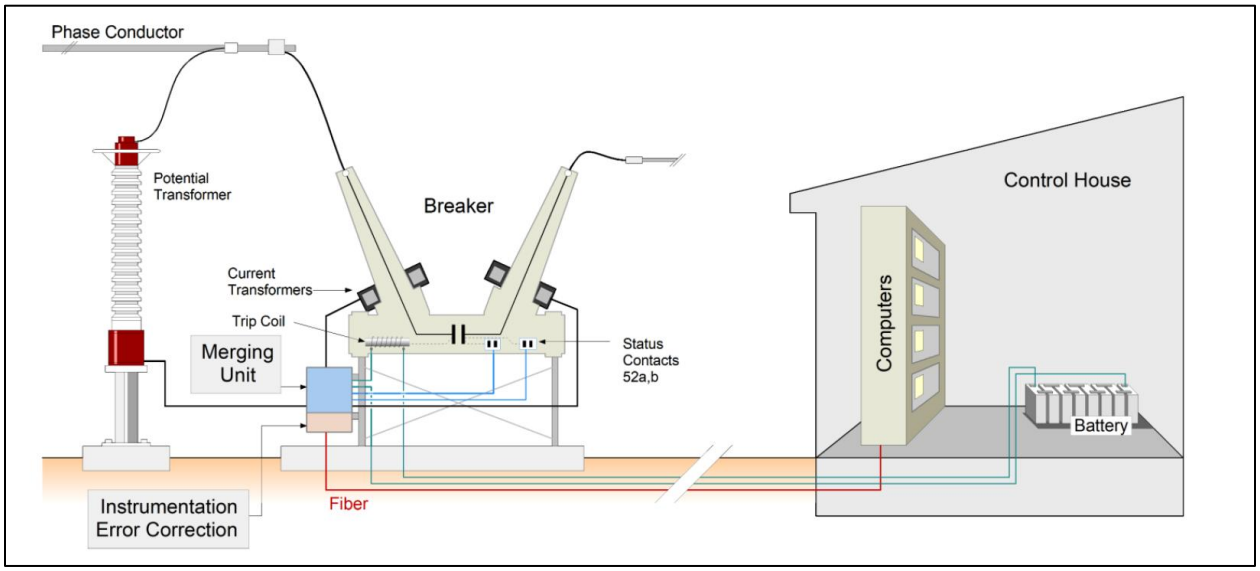


Figure 1: Error Correction within Merging Units

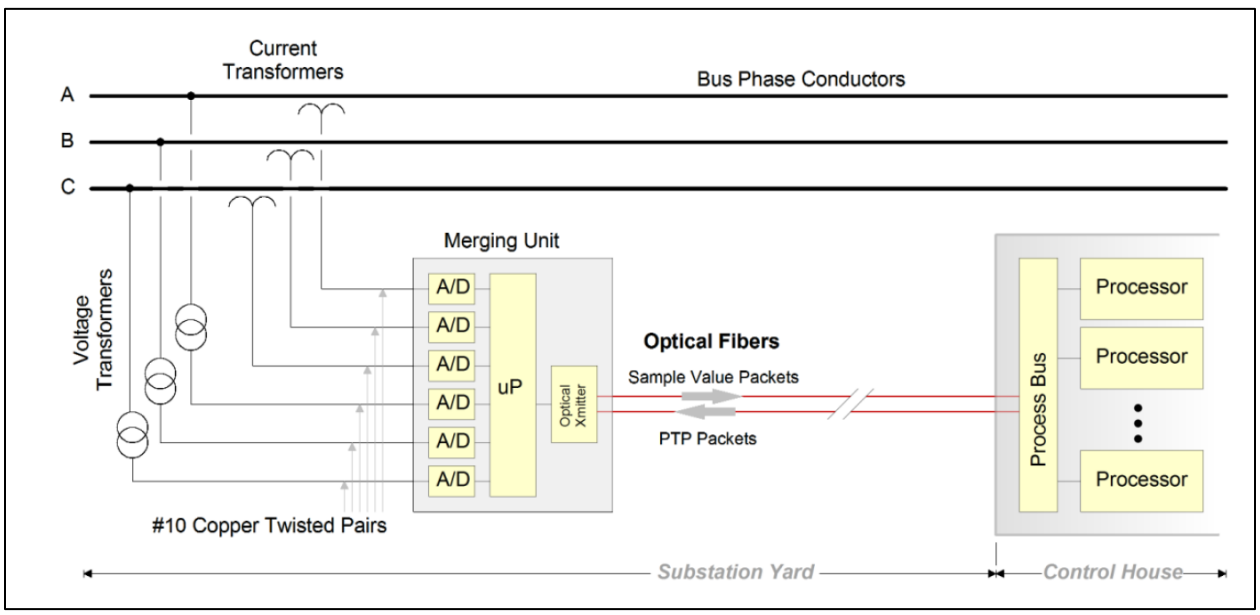


Figure 2: Instrumentation Channel Subsystem–Voltage and Current Instrumentation Channel

We define the instrumentation error as follows:

<u>Current Instrumentation Channels:</u>

$$\varepsilon = \frac{|\, k\, i_s(t) - i_p(t)\, |}{I_{range}}$$

Where:

- $i_s(t)$ is the secondary instantaneous current value
- $i_p(t)$ is the primary instantaneous current value
- $I_{range}$ is the measurement system current range (on the primary side)
- $k$ is the nominal transformation ratio of the current transformer

<u>Voltage Instrumentation Channels:</u>

$$\varepsilon = \frac{|\, k\, v_s(t) - v_p(t)\, |}{V_{range}}$$

Where:

- $v_s(t)$ is the secondary instantaneous voltage value
- $v_p(t)$ is the primary instantaneous voltage value
- $V_{range}$ is the measurement system voltage range (on the primary side)
- $k$ is the nominal transformation ratio of the voltage transformer

There are several parts in the instrumentation channel introducing errors to the primary voltage and current:

- Instrument Transformers
- Copper Wires
- Merging unit/relay input circuit
- Analog to Digital Converter

In the following analysis, we will focus on the error introduced by the instrument transformers, copper wires and the merging unit/relay input circuit. The error introduced by a N bit Analog to Digital Converter (ADC), which consists of the quantization error and some other smaller sources, it is typically very small for today's IEDs and can be calculated as:

$$\text{Quantization Error} = 0.5 \times \frac{V_{range}}{2^N} \; or \; 0.5 \times \frac{I_{range}}{2^N}$$

Where $V_{range}$ and $I_{range}$ have been defined earlier (which are equivalent to the input range of the A/D converter). $N$ is the number of bits of the A/D converter. Note that for a 16-bit A/D converter, $N = 16$ (which is typically used today), and this error is negligible.

In this project we will focus on a current instrumentation channel. A typical Current Instrumentation Channel configuration is shown in Figure 3. It has three main components: the current transformer, the instrumentation cable and the burden resistor. The problem is stated as follows: a measurement is taken of the current at the burden. THEN: estimate the electric current in the primary of the CT. As shown in Figure 3, the measurement we have is the voltage across the burden resistor, which is " $v_{out}$". The current to be estimated is the current in the phase conductor or the transformer primary current, i.e. $i_p$ . For this purpose, the dynamic state estimation method will be used to estimate $i_p$.

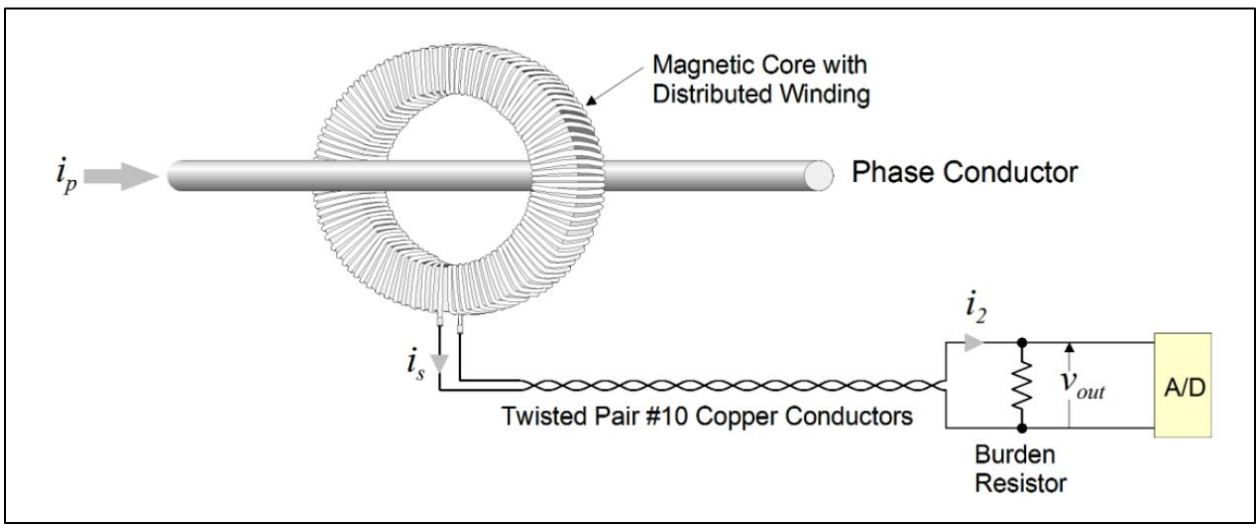


Figure 3: Typical Current Instrumentation Channel Configuration

The equivalent circuit of Current Instrumentation Channel is shown in Figure 4.

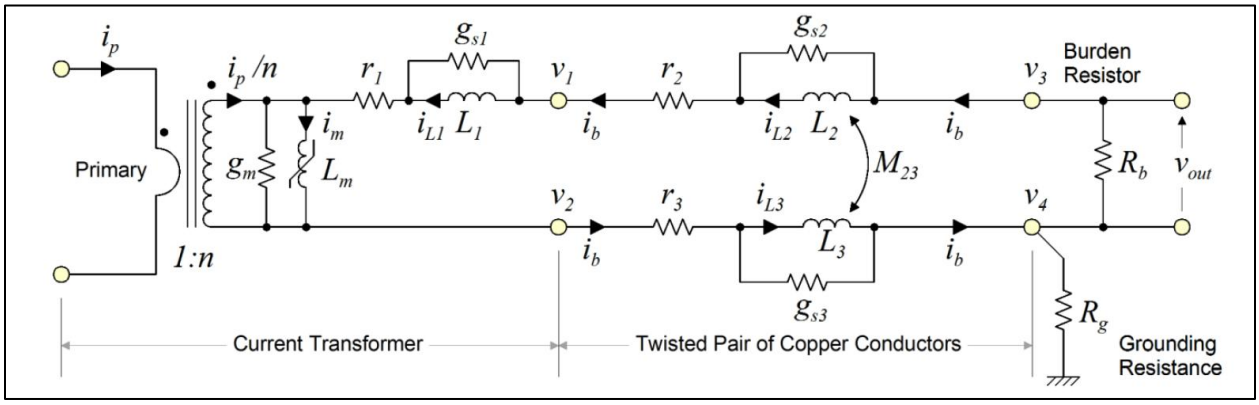


Figure 4: Current Instrumentation Channel: Equivalent Circuit

The equivalent circuit model is defined in terms of a number of state variables. The state variables for this system are:

$$x(t) = [v_1(t) \quad v_2(t) \quad v_3(t) \quad v_4(t) \quad i_p(t) \quad i_{L_1}(t) \quad i_{L_2}(t) \quad i_{L_3}(t) \quad i_m(t) \quad \lambda(t) \quad y_1(t) \quad y_2(t) \quad \dots \quad y_n(t)]$$

Any measurement taken on this circuit, can be expressed as a function of the instrumentation channel state. Assuming that the measurements have been expressed as functions of the state, then dynamic state estimation will provide the estimate of the state. A brief description of the dynamic state estimation follows:

**The Dynamic State Estimation Problem:**

Assume that the measurement models are given. This means that each measurement is given as a function of the state and some unknown measurement error, i.e.

$$z_i = h_i(x) + \eta_i, \quad i = 1, 2, 3, \dots, m$$

Where: $m$ is the total number of measurements, is the measurement $i$, $h_i(x)$ is the equation expressing the measurement $i$ as a function of the state, and $\eta_i$ is the measurement error with the following statistics:

$$\mathrm{E}[\eta_i] = 0, \qquad \mathrm{Var}[\eta_i] = \sigma_i^2, \quad \mathrm{E}[\eta_i \eta_j] = 0$$

The state estimation problem can be solved with the WLS (Weighted Least Squares) method which is defined with:

$$\min J = \sum_{i=1}^{n} \left( \frac{z_i - h_i(x)}{\sigma_i} \right)^2 = \sum_{i=1}^{n} s_i^2 = \eta^T W \eta$$

Where:

- $\eta = z - h(x)$
- $s_i = \frac{\eta_i}{\sigma_i}$
- $W = \text{diag}\left(\dots, \frac{1}{\sigma_i^2}, \dots\right)$
- $\sigma_i$ is the standard deviation of the error of the meter by which the corresponding measurement $z_i$ is measured.

The best estimate of the system is obtained from the Gauss–Newton iterative algorithm:

$$\hat{x}^{\nu+1} = \hat{x}^{\nu} + (H^T W H)^{-1} H^T W (z - h(\hat{x}^{\nu}))$$

Where:

- $\hat{x}^{\nu}$ refers to the iterate (current estimate) of the state vector $x$
- $H$ is the Jacobian matrix of the measurement equations:

$$H = \frac{\partial h(x)}{\partial x}$$

Consider the normalized residuals:

$$s_i = \frac{\eta_i}{\sigma_i} = \frac{z_i - h_i(\hat{x})}{\sigma_i}$$

computed at the solution $\hat{x}$. The goodness of fit is defined as the probability that the distribution of the measurement errors lies within the expected bounds. This probability is computed by first evaluating the chi-square variable.

$$\zeta = \chi^2 = \sum_{i=1}^{m} s_i^2 = \sum_{i=1}^{m} \left(\frac{z_i - h_i(\hat{x})}{\sigma_i}\right)^2$$

The probability distribution function of the above chi-square variable is:

$$\Pr(\zeta, \nu) = \Pr[\chi^2 \leq \zeta]$$

where $\nu$ is the number of degrees of freedom, is provided below.

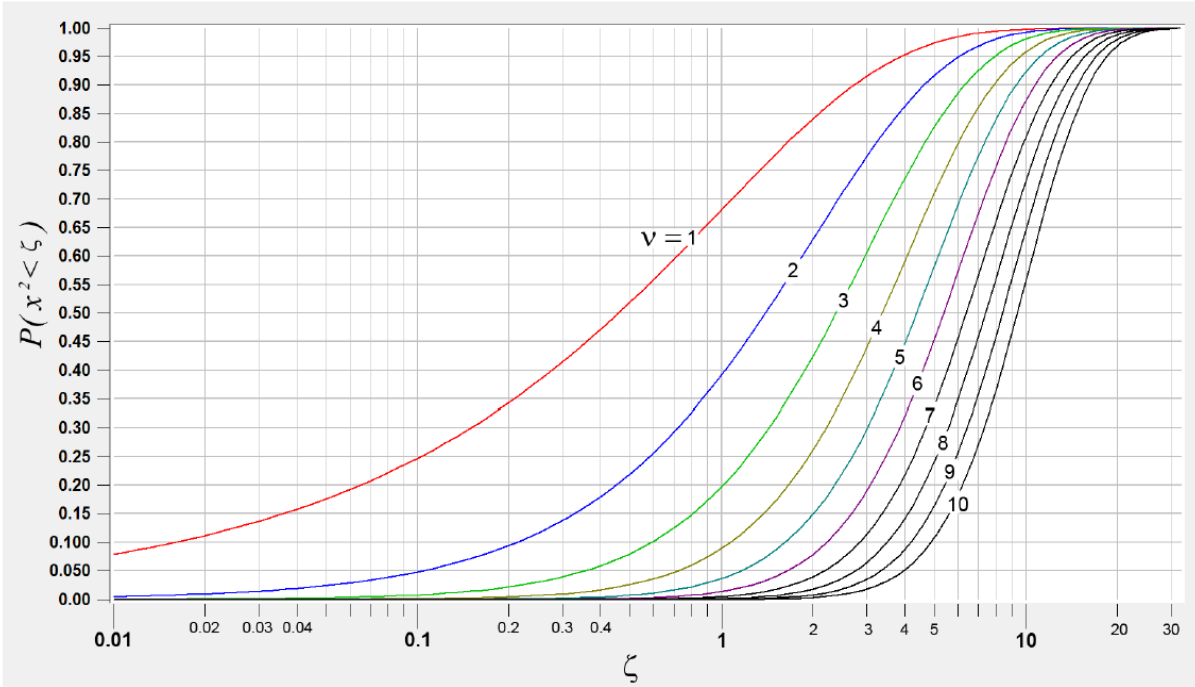


The confidence level that expresses the probability that the state estimate fits the mathematical model of the measurements is given by the following equation:

$$\Pr\left[\,\chi^2 \geq \zeta\,\right] = 1 - \Pr\left[\,\chi^2 \leq \zeta\,\right] = 1 - \Pr\left(\zeta, \nu\right)$$

The above equations and graph provide a straightforward procedure for computing the confidence level.

It should be apparent that dynamic state estimation can be performed once all measurements have been expressed as functions of the state variables.

The measurement models, i.e., the measurements expressed as functions of the state, are provided in Appendix A.

## Implementation and Demonstration

The project can be accomplished with the following tasks.

**Task 0**: Develop a user interface for (a) reading/reporting simulated data (in COMTRADE format), (b) reporting any intermediate calculations, for example in the dynamic state estimation you will be generating estimated values for all the measurements and states – these can be graphed to assess the correctness of your calculations, and (c) reporting the relay actions.

**Task 1**: Develop a computer program to read COMTRADE data. You may also write a computer program to display this data graphically, so that you can verify that the data have been read correctly.

**Task 2**: Develop the mathematical model of the instrumentation channel which includes the current transformer, the wire circuit connecting the current transformer to the merging unit, and the burden of the merging unit. Define the state of the instrumentation channel, i.e. the variables that completely define the operating point of this circuit.

**Task 3**: Develop the equations of all measurements, actual, derived, virtual and pseudo as a function of the state of the system. The measurements should make the system "observable".

**Task 4**: Develop the algorithm to solve the dynamic state estimation problem defined with the measurements defined in Task 3.

**Task 5**: Develop a computer program that reads data from a COMTRADE file (one set of data at two consecutive sampling times at a time). For this data: (a) perform a dynamic state estimation, (b) perform a chi-square test, (c) report the results and (d) proceed to the next two sampling times.

**Task 6:** Summarize the results of the state estimation. You can provide the estimated primary current, the estimated magnetic flux in the current transformer core, the estimated voltage at the secondary of the current transformer, the confidence level, selected residuals, etc.

Helpful details are provided in Appendix A.

## Discussion

The description and instructions for estimating the primary current in a current instrumentation channel are purposely terse. Exercise your judgment and be creative. You are encouraged to use graphical displays of your data to gain insight into your project.

## Final Report Preparation

The final report should have (as a minimum) the following structure:

- Introduction and Scope
- Problem Formulation

- Solution Methodology – Description of your algorithm
- Presentation of Results
- Conclusions and Observations

**References**


1. Sakis Meliopoulos, George Cokkinides, Jiahao Xie, and Yuan Kong, "Instrumentation Error Correction within Merging Units", *Proceedings of the 2018 Georgia Tech Fault and Disturbance Analysis Conference*, Atlanta, Georgia, April 30-May 1, 2018.
2. Sakis Meliopoulos, Jiahao Xie, and George Cokkinides, " Impact of Error Correction on Protection Performance during Geomagnetic Disturbances", *Proceedings of the 2019 Georgia Tech Fault and Disturbance Analysis Conference*, Atlanta, Georgia, April 29-30, 2019.
3. Yuan Kong and A P. Meliopoulos, "Intelligent Merging Unit: DSE-based online instrumentation channel error correction", *Electric Power Systems Research*, Volume 200, November 2021, 107468, ISSN 0378-7796. https://doi.org/10.1016/j.epsr.2021.107468.
4. Emeka Obikwelu, A. P. Sakis Meliopoulos, "VT Instrumentation Channel Error Correction using Dynamic State Estimation," Proceedings of the 52st North American Power Symposium (NAPS 2020), Phoenix, AZ, April 11-13, 2021.

# **Appendix A:** Method Description and Test Case(s) - Project: The Intelligent Merging Unit: Error Correction by Dynamic State Estimation

This Appendix provides the example instrumentation channel from which this data were obtained. It provides the specific parameters and the mathematical model of the instrumentation channel. Data obtained using this instrumentation channel are in COMTRADE files.

## 1. Events

Two events/cases are provided, one case per COMTRADE file. The cases involve 2 fault current events and loading changes, with varying degrees of CT saturation. The voltage across the CT burden for each event is plotted in Figures A-1, and A-2 respectively. The data are stored in the following COMTRADE files:

- Event 01:

  ECE6323_PROJECT_02_CTCHANNEL_EVENT_01.cfg, and

  ECE6323_PROJECT_02_CTCHANNEL_EVENT_01.dat

- Event 02:

  ECE6323_PROJECT_02_CTCHANNEL_EVENT_02.cfg, and

  ECE6323_PROJECT_02_CTCHANNEL_EVENT_02.dat

Of course you can view the data via the program WinXFM and generate the same graphs as those in Figures A-1 and A-2.

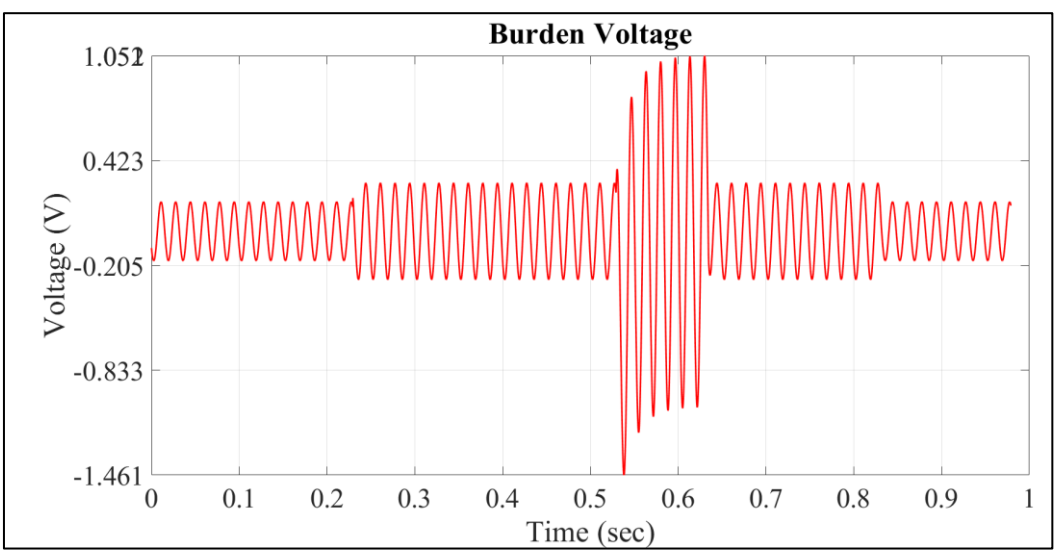


Figure A-1: Event 01

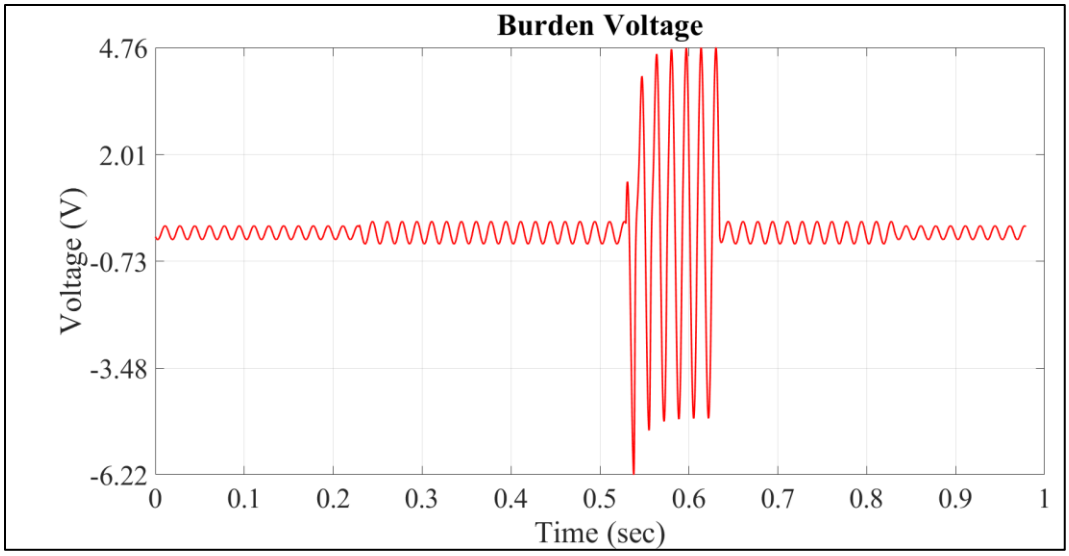


Figure A-2: Event 02

## 2. Description of the Example Instrumentation Channel

The example instrumentation channel is shown in Figure A-4. The parameters of the components of the instrumentation channel are given in Figure A-5.

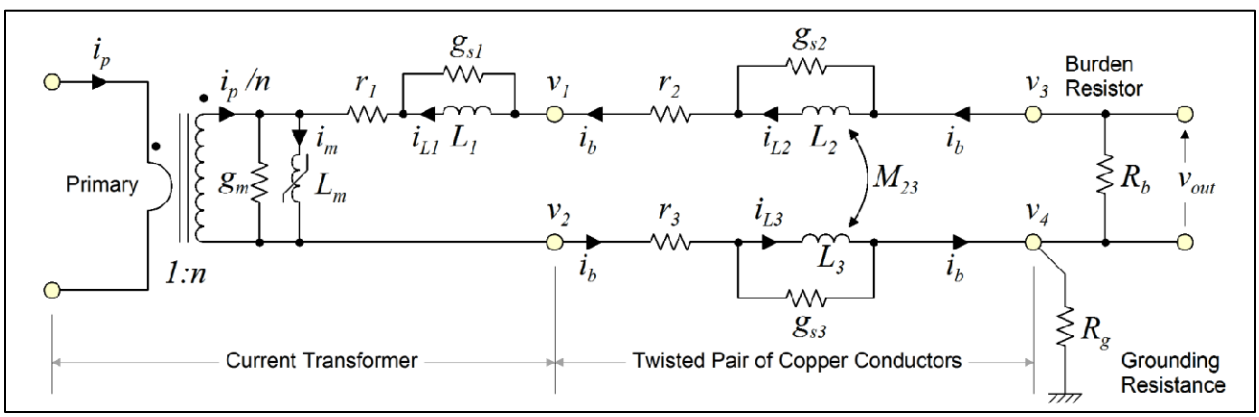


Figure A-4: Example Current Instrumentation Channel

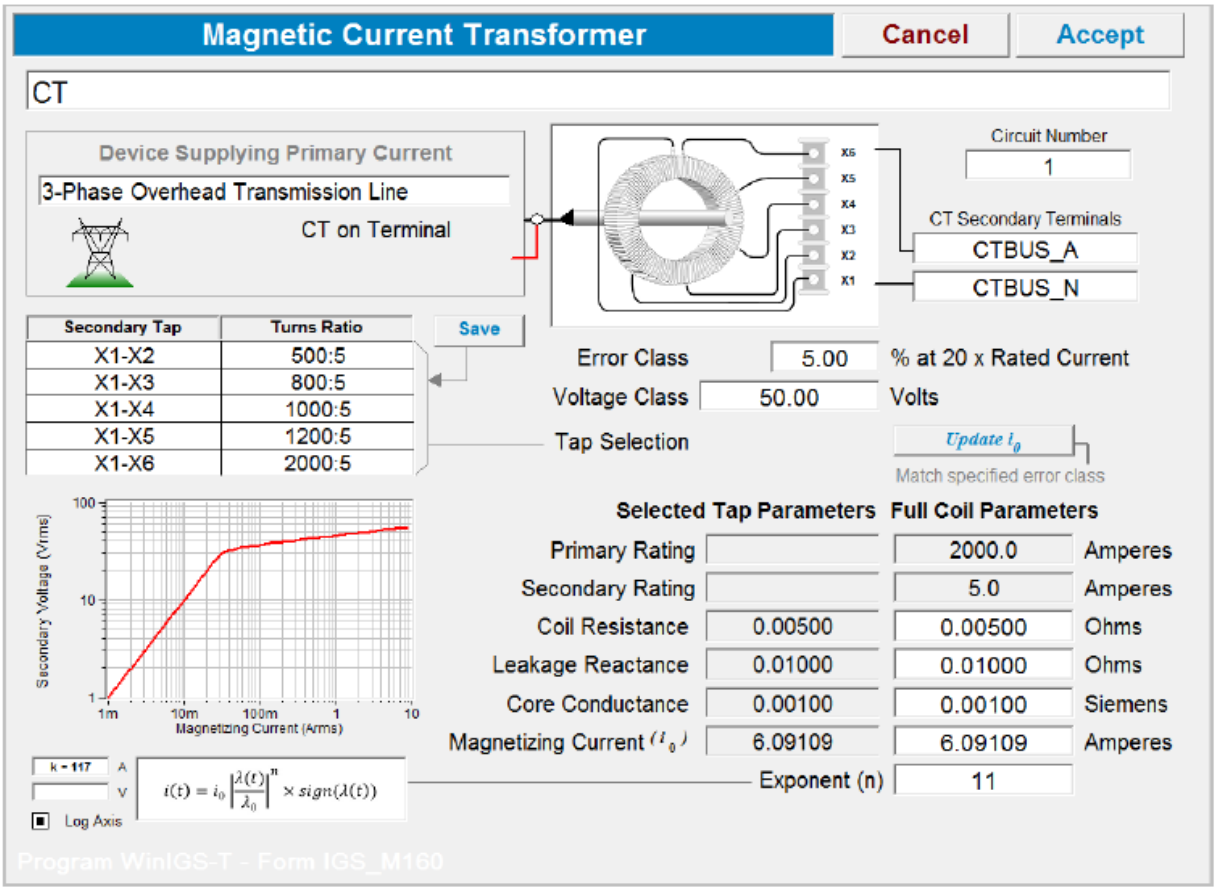


Figure A-5: CT Parameters

Table A-1: Instrumentation Cable: (a) Series Admittance (Siemens) and (b) Series Impedance Matrix (Ohms)

| | A1 | N1 |
|---|---|---|
| A1 | 1.996 - j0.5129 | -0.2740 - j0.3943 |
| N1 | -0.2740 - j0.3943 | 1.996 - j0.5129 |

(a)

| | A1 | N1 |
|---|---|---|
| A1 | 0.4469 + j0.1312 | 0.007616 + j0.1082 |
| N1 | 0.007616 + j0.1082 | 0.4469 + j0.1312 |

(b)

Burden Resistance: $R_b$ = 0.1 Ohm

The measurement models are developed from the equivalent circuit below.

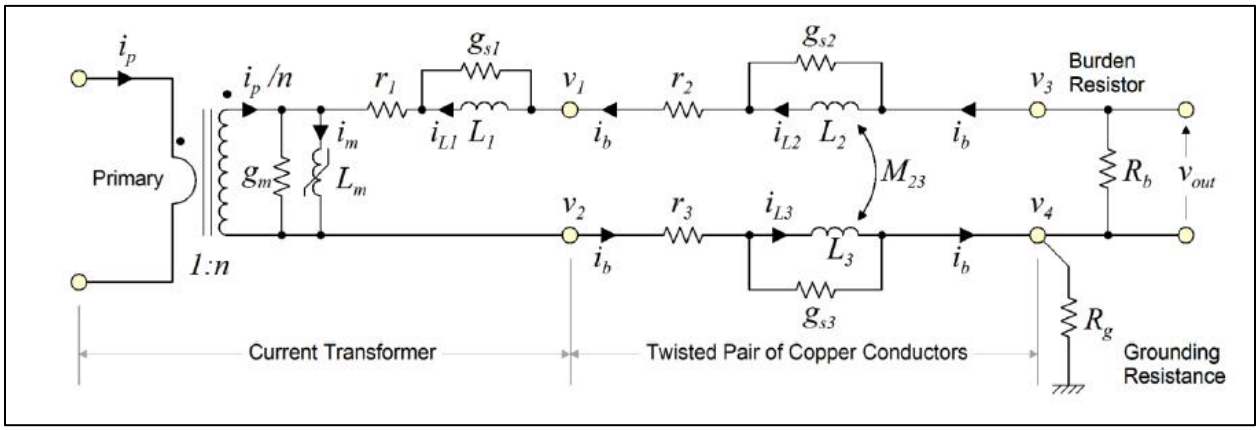


## 3. Mathematical Model of Measurements

In a current instrumentation channel one measurement is taken, the current through the burden or the voltage across the burden. In addition, by considering the physical laws that the instrumentation channel must obey, we identify a number of virtual and derived measurements. Finally the ground point voltage is unknown (and difficult to measure). Since the voltage at the ground point is expected to be near zero, we introduce a pseudo-measurement for this point. The actual, virtual, derived and pseudo measurements are provided next.

**Actual Measurements (1)**

$$v_{out}(t) = v_3(t) - v_4(t)$$

**Virtual Measurements (10)**

KCL at Node 0:

$$0 = -g_m e(t) - i_m(t) + \frac{1}{n} i_p(t) + i_{L1}(t) + g_{s1} L_1 \frac{di_{L1}(t)}{dt}$$

KCL at Node 1:

$$0 = g_m e(t) + i_m(t) - \frac{1}{n} i_p(t) - i_{L2}(t) - g_{s2}\left(L_2 \frac{di_{L2}(t)}{dt} - M_{23} \frac{di_{L3}(t)}{dt}\right)$$

KCL at Node 2:

$$0 = -g_m e(t) - i_m(t) + \frac{1}{n} i_p(t) + i_{L3}(t) + g_{s3}\left(L_3 \frac{di_{L3}(t)}{dt} - M_{23} \frac{di_{L2}(t)}{dt}\right)$$

KVL Loop: Node 1 → Transformer → Node 2

$$0 = -v_1(t) + v_2(t) + e(t) + L_1 \frac{di_{L1}(t)}{dt} + r_1 \left( g_m e(t) + i_m(t) - \frac{1}{n} i_p(t) \right)$$

KVL Loop: Node 3 → Node 1

$$0 = -v_3(t) + v_1(t) + r_2 \left( i_{L2}(t) + g_{s2} \left( L_2 \frac{di_{L2}(t)}{dt} - M_{23} \frac{di_{L3}(t)}{dt} \right) \right) + L_2 \frac{di_{L2}(t)}{dt} - M_{23} \frac{di_{L3}(t)}{dt}$$

KVL Loop: Node 2 → Node 4

$$0 = -v_2(t) + v_4(t) + r_3 \left( i_{L3}(t) + g_{s3} \left( L_3 \frac{di_{L3}(t)}{dt} - M_{23} \frac{di_{L2}(t)}{dt} \right) \right) + L_3 \frac{di_{L3}(t)}{dt} - M_{23} \frac{di_{L2}(t)}{dt}$$

KCL at Node 3:

$$0 = i_{L2}(t) + g_{s2} \left( L_2 \frac{di_{L2}(t)}{dt} - M_{23} \frac{di_{L3}(t)}{dt} \right) + g_b (v_3(t) - v_4(t))$$

KCL at Node 4:

$$0 = -i_{L3}(t) - g_{s3} \left( L_3 \frac{di_{L3}(t)}{dt} - M_{23} \frac{di_{L2}(t)}{dt} \right) + g_b (v_4(t) - v_3(t))$$

Transformer Magnetizing Leg:

$$0 = e(t) - \frac{d\,\lambda(t)}{dt}$$

$$0 = i_m(t) - i_0 \left| \frac{\lambda(t)}{\lambda_0} \right|^n sign\,(\lambda(t)) - \frac{1}{L_0}\,\lambda(t)$$

Use, for example, $\mathrm{n} = 11$. In this case (odd n), the above expression simplifies to:

$$0 = i_m(t) - i_0 \left( \frac{\lambda(t)}{\lambda_0} \right)^n - \frac{1}{L_0}\,\lambda(t)$$

**Derived Measurements (5)**

$$i_b^m(t) = -g_b (v_3(t) - v_4(t))$$
$$i_b^m(t) = i_{L1}(t) + g_{s1} L_1 \frac{di_{L1}(t)}{dt}$$
$$i_b^m(t) = i_{L2}(t) + g_{s2} \left( L_2 \frac{di_{L2}(t)}{dt} - M_{23} \frac{di_{L3}(t)}{dt} \right)$$
$$i_b^m(t) = -i_{L3}(t) - g_{s3} \left( L_3 \frac{di_{L3}(t)}{dt} - M_{23} \frac{di_{L2}(t)}{dt} \right)$$
$$i_b^m(t) = g_m e(t) + i_m(t) - \frac{1}{n} i_p(t)$$

**Pseudo Measurement (1)**

Node 4 is grounded:

$$0^m = v_4(t)$$

There are $1 + 10 + 5 + 1 = 17$ measurements. The number of states is 11

**State Vector**

$$x = [v_1(t),\, v_2(t),\, v_3(t),\, v_4(t),\, e(t),\, \lambda(t),\, i_p(t),\, i_m(t),\, i_{L1}(t),\, i_{L2}(t),\, i_{L3}(t)]^T$$

Observe that one equation is nonlinear (power of 11). This equation is quadratized to obtain the corresponding quadratized measurement models. Additional variables $y_1, y_2, y_3, y_4$ are introduced to reduce the order of each equation to 2.

$$\begin{aligned}
0 &= y_1(t) - \left(\frac{\lambda(t)}{\lambda_0}\right)^2 \\
0 &= y_2(t) - (y_1(t))^2 \\
0 &= y_3(t) - (y_2(t))^2 \\
0 &= y_4(t) - y_3(t)\, y_1(t) \\
0 &= i_m(t) - i_0\left(\frac{\lambda(t)}{\lambda_0}\right) y_4(t) - \frac{1}{L_0}\,\lambda(t)
\end{aligned}$$

Subsequently, the dynamic state estimation is applied using the above measurement model. Now there are $1 + 14 + 5 + 1 = 21$ measurements in the quadratized model. The number of states is 15

**State Vector**

$$x = [v_1(t),\, v_2(t),\, v_3(t),\, v_4(t),\, e(t),\, \lambda(t),\, y_1(t),\, y_2(t),\, y_3(t),\, y_4(t),\, i_p(t),\, i_m(t),\, i_{L1}(t),\, i_{L2}(t),\, i_{L3}(t)]^T$$

Summary of measurements and corresponding error standard deviation:

| # | **Measurement models (measurement as function of the state)** | **σ** |
|---|---|---|
| 1 | $v_{out}(t) = v_3(t) - v_4(t)$ | 0.005V |
| 2 | $0 = -g_m e(t) - i_m(t) + \frac{1}{n} i_p(t) + i_{L1}(t) + g_{s1} L_1 \frac{di_{L1}(t)}{dt}$ | 0.005A |
| 3 | $0 = g_m e(t) + i_m(t) - \frac{1}{n} i_p(t) - i_{L2}(t) - g_{s2}\left(L_2 \frac{di_{L2}(t)}{dt} - M_{23} \frac{di_{L3}(t)}{dt}\right)$ | 0.005A |
| 4 | $0 = -g_m e(t) - i_m(t) + \frac{1}{n} i_p(t) + i_{L3}(t) + g_{s3}\left(L_3 \frac{di_{L3}(t)}{dt} - M_{23} \frac{di_{L2}(t)}{dt}\right)$ | 0.005 A |

| | | |
|---|---|---|
| 5 | $0 = -v_1(t) + v_2(t) + e(t) + L_1 \frac{di_{L1}(t)}{dt} + r_1\left(g_m e(t) + i_m(t) - \frac{1}{n} i_p(t)\right)$ | 0.0005 A |
| 6 | $0 = -v_3(t) + v_1(t) + r_2\left(i_{L2}(t) + g_{s2}\left(L_2 \frac{di_{L2}(t)}{dt} - M_{23} \frac{di_{L3}(t)}{dt}\right)\right) + L_2 \frac{di_{L2}(t)}{dt} - M_{23} \frac{di_{L3}(t)}{dt}$ | 0.0005 A |
| 7 | $0 = -v_2(t) + v_4(t) + r_3\left(i_{L3}(t) + g_{s3}\left(L_3 \frac{di_{L3}(t)}{dt} - M_{23} \frac{di_{L2}(t)}{dt}\right)\right) + L_3 \frac{di_{L3}(t)}{dt} - M_{23} \frac{di_{L2}(t)}{dt}$ | 0.0005 A |
| 8 | $0 = i_{L2}(t) + g_{s2}\left(L_2 \frac{di_{L2}(t)}{dt} - M_{23} \frac{di_{L3}(t)}{dt}\right) + g_b(v_3(t) - v_4(t))$ | 0.005A |
| 9 | $0 = -i_{L3}(t) - g_{s3}\left(L_3 \frac{di_{L3}(t)}{dt} - M_{23} \frac{di_{L2}(t)}{dt}\right) + g_b(v_4(t) - v_3(t))$ | 0.005A |
| 10 | $0 = e(t) - \frac{d\,\lambda(t)}{dt}$ | 0.0005 A |
| 11 | $0 = y_1(t) - \left(\frac{\lambda(t)}{\lambda_0}\right)^2$ | 0.00005 A |
| 12 | $0 = y_2(t) - (y_1(t))^2$ | 0.00005 A |
| 13 | $0 = y_3(t) - (y_2(t))^2$ | 0.00005 A |
| 14 | $0 = y_4(t) - y_3(t)\, y_1(t)$ | 0.00005 A |
| 15 | $0 = i_m(t) - i_0\left(\frac{\lambda(t)}{\lambda_0}\right) y_4(t) - \frac{1}{L_0}\,\lambda(t)$ | 0.0003A |
| 16 | $i_b^m(t) = -g_b(v_3(t) - v_4(t))$ | 0.05A |
| 17 | $i_b^m(t) = i_{L1}(t) + g_{s1} L_1 \frac{di_{L1}(t)}{dt}$ | 0.05A |
| 18 | $i_b^m(t) = i_{L2}(t) + g_{s2}\left(L_2 \frac{di_{L2}(t)}{dt} - M_{23} \frac{di_{L3}(t)}{dt}\right)$ | 0.05A |
| 19 | $i_b^m(t) = -i_{L3}(t) - g_{s3}\left(L_3 \frac{di_{L3}(t)}{dt} - M_{23} \frac{di_{L2}(t)}{dt}\right)$ | 0.05A |
| 20 | $i_b^m(t) = g_m e(t) + i_m(t) - \frac{1}{n} i_p(t)$ | 0.05A |
| 21 | $0^m = v_4(t)$ | 1 V |

The error standard deviation are determined by the following conventions:

- Actual Measurements: 0.05%
- Virtual Measurements: 0.005%
- Derived measurements: 0.05%
- Pseudo Measurements: 10%

The parameters appearing in above equations are (see provided data):

| Parameter | Value |
|---|---|
| $n$ | 400 |
| $g_m$ | 0.001 S |
| $L_1$ | 26.526 μH |
| $L_2$ | 348.0 μH |
| $L_3$ | 348.0 μH |
| $M_{23}$ | 287.0 μH |
| $g_{s1} = 0.5\frac{h}{2L_1}$ | 1.9635 S |
| $g_{s2} = 0.5\frac{h}{2L_2}$ | 0.1497 S |
| $g_{s3} = 0.5\frac{h}{2L_3}$ | 0.1497 S |
| $r_1$ | 0.005 Ω |
| $r_2$ | 0.4469 Ω |
| $r_3$ | 0.4469 Ω |
| $R_b$ or $\frac{1}{g_b}$ | 0.1 Ω |
| $\lambda_0$ | 0.1876 Wb |
| $i_0$ | 6.09109 A |
| $L_0$ | 2.36 H |